embedian

A9

SMARC freescale

SMARC-FIMX6

HIGHLIGHTS

- Freescale i.MX6 ARM Cortex-A9
- 1GHz, Solo/Dual Lite/Dual/Quad Core
- Up to 2GB DDR3, 4GB eMMC, SD/MMC
- Parallel RGB, HDMI, LVDS 1600x1200
- 2CAN, 4UART, 5I^{2}C, 1PCIe
- 1 Gigabit LAN
- Long-term availability (10+ years)
- SMARC 1.0 or 1.1 Compliant

SMARC-FIMX6 with maximum flexibility

The highly scalable SMARC-FiMX6 modules with single, dual lite, dual or quad core Freescale i.MX6 processors cover an extremely wide performance range. Based on the ARM Cortex A9 technology, they support a huge variety of industry standard interfaces, while at the same time providing advanced multimedia and high speed connectivity making it suitable for an almost unlimited number of applications.

The benefits of standardization are listed as follows.

Reduced cost
Mass production equals a better price performance ratio

Improved quality
Mass production equals higher product quality

Improved negotiating power for the buyer
Standards drive product differentiation and competition toward price and service and away from features. This gives buyer both better pricing and better support.

Standard architectures
Allows software teams to develop new applications faster with fewer people.

Scalable and flexible
More module offerings can be applied to the same platform.

modularized design | low power | wide temperature | extensive supports | cost effective | high performance | long lifecycle

Technical Information

SMARC-FIMX6 Module

Processor	Freescale i.MX6 1GHz ARM Cortex-A9
Memory	Onboard 4GB eMMC Onboard DDR3 up to 2GB Onboard 4MB SPI NOR Flash Onboard 4KB EEPROM
Networking	1 x 10/100/1000Mbps Ethernet
Display	Parallel RGB/LVDS/HDMI
Expansion	SD/SDHC, USB Host 2.0, PCIe
USB	1 x USB Host 2.0, 1 x USB OTG
Additional Interfaces	4 x UARTs, 2 x SPIs, 5 x I2C, 1 x I2S, 2 x CAN Bus, Camera Input, PWM, 12 x GPIOs, SATA
SW Support	Linux 3.14.28, Yocto Ubuntu 14.04 or Android 5.0
Power	1.5 ~ 3.5Watts Typical

Evaluation Carrier (mini-ITX, 12V~24V)

Ethernet	2 (RJ45)
RS 232	4 (2 x DB9, 2 x 2.0mm header)
USB	1 xmini-B, 1xType A, 2 x mini-PCIe
SATA	SATA Connector
SD/SDMMC	1 x SD Connector, 1 x 4GB eMMC
CAN Bus	2 (10-way 2mm header)
SPI	4 (6-way 2mm header)
I2C	2 (4-way 2mm header)
GPIO	12 (14-way 2mm header)
dual-channel LVDS	24-bit board-to-board connector
Parallel LCD	1 x 24-bit DB15 Connector
PCIe/mini-PCIe	1 x PCIe, 2 x mini-PCIe Connector
Stereo Audio	3.5mm Audio Jack
HDMI	HDMI Connector

Block Diagram

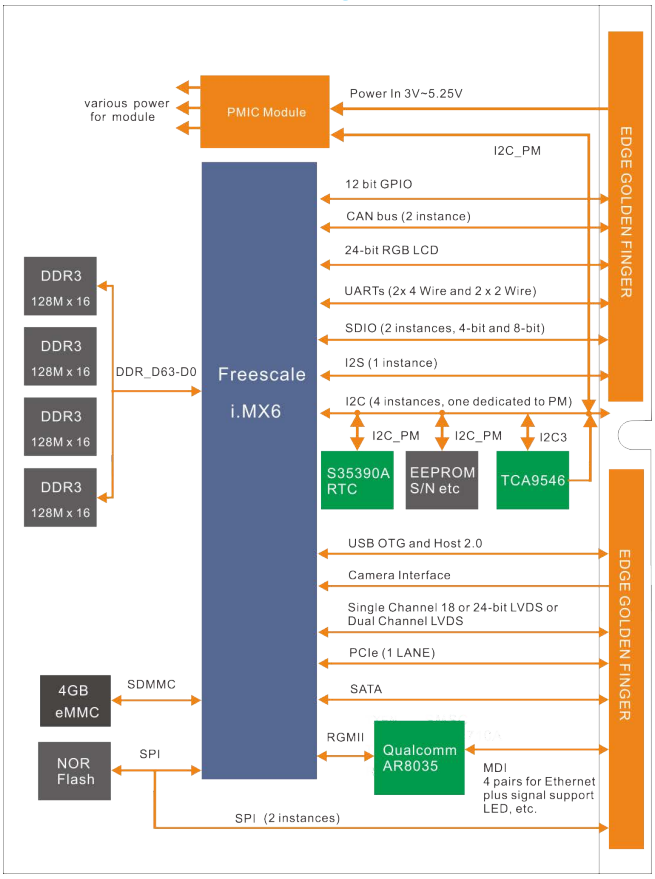

Evakuation Kit – Accelerated Design

The SMARC-FiMX6 Evaluation Kit is intended to serve multiple needs and summarized as followed:

- SMARC-FiMX6 bring-up platform for hardware and software development.
- Module validation platform.
- Customer evaluation platform.
- Customer design reference.
- Manufacturing test platform.
- Flexible prototyping vehicle (facilitated by multiple mezzanines).

Embedian, Inc.
4F.-7 432 Keelung Rd. Sec.1
Taipei 11051, Taiwan
Tel: +886 2 2722 3291
http://www.embedian.com